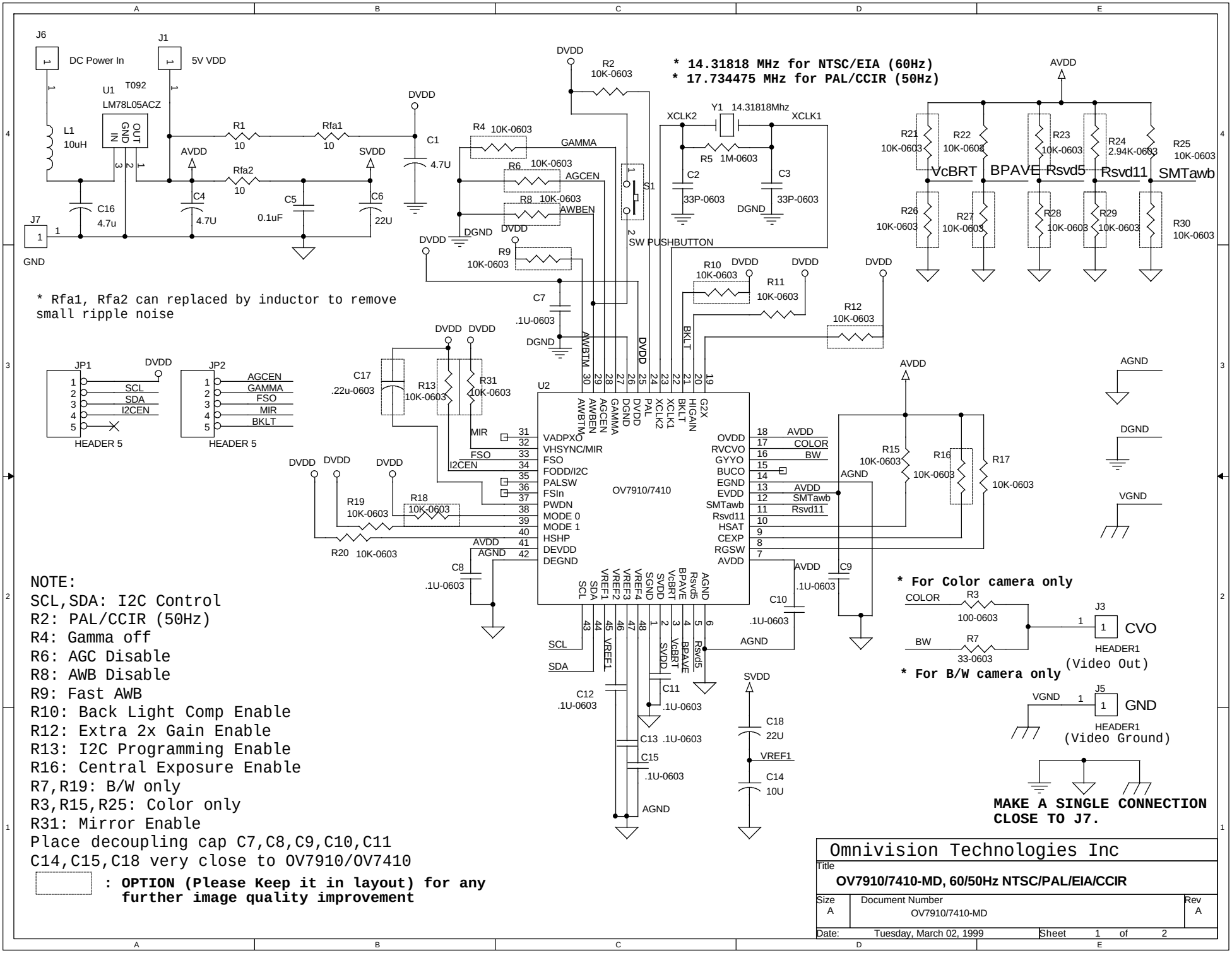

NOTE:
SCL,SDA: I2C Control
R2: PAL/CCIR (50Hz)
R4: Gamma off
R6: AGC Disable
R8: AWB Disable
R9: Fast AWB
R10: Back Light Comp Enable
R12: Extra 2x Gain Enable
R13: I2C Programming Enable
R16: Central Exposure Enable
R7,R19: B/W only
R3,R15,R25: Color only
R31: Mirror Enable
Place decoupling cap C7,C8,C9,C10,C11
C14,C15,C18 very close to OV7910/OV7410

: **OPTION (Please Keep it in layout) for any further image quality improvement**

Omnivision Technologies Inc

Title: **OV7910/7410-MD, 60/50Hz NTSC/PAL/EIA/CCIR**

Size	Document Number	Rev
A	OV7910/7410-MD	A

Date: Tuesday, March 02, 1999 Sheet 1 of 2